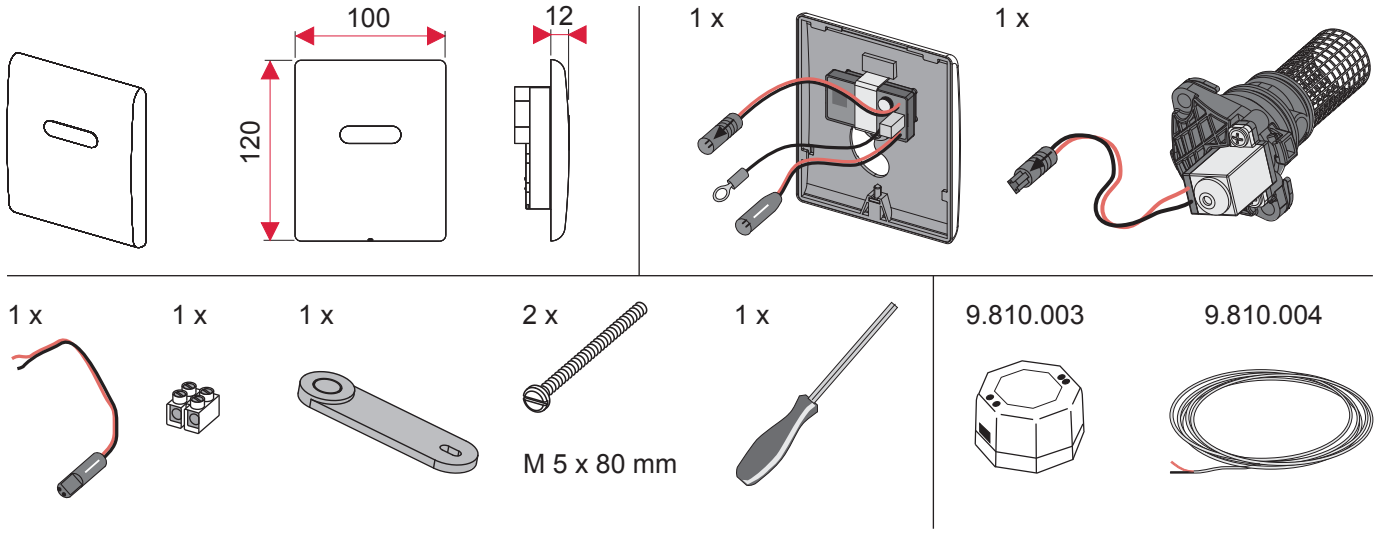
100
12
120
1 x
1 x
1 x
1 x
1 x
2 x
M 5 x 80 mm
1 x
9.810.003
9.810.004

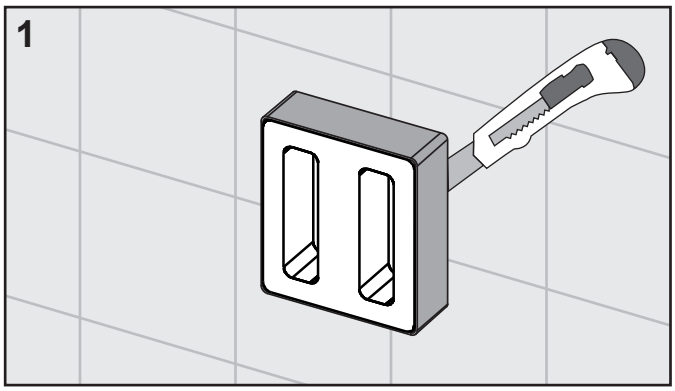
1

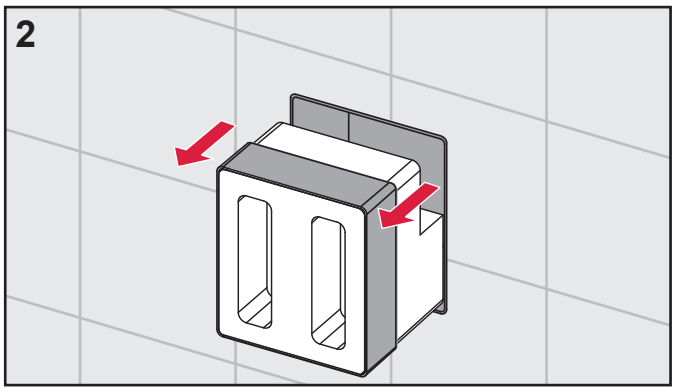
2

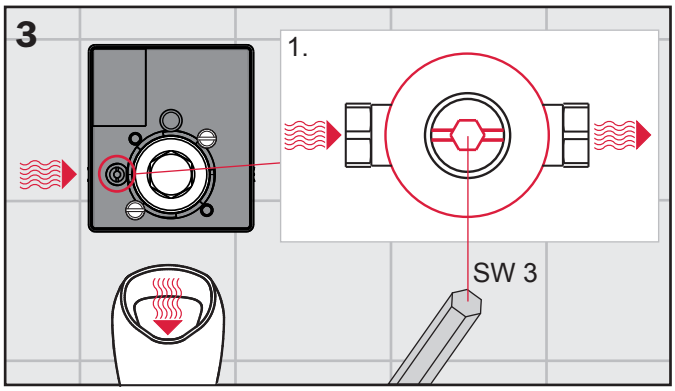
3
1.
SW 3

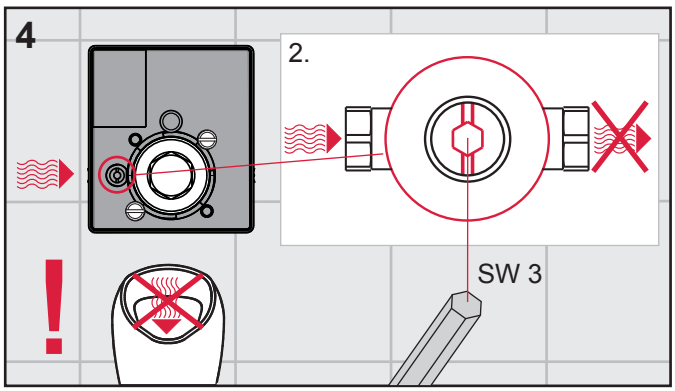
4
2.
SW 3
!

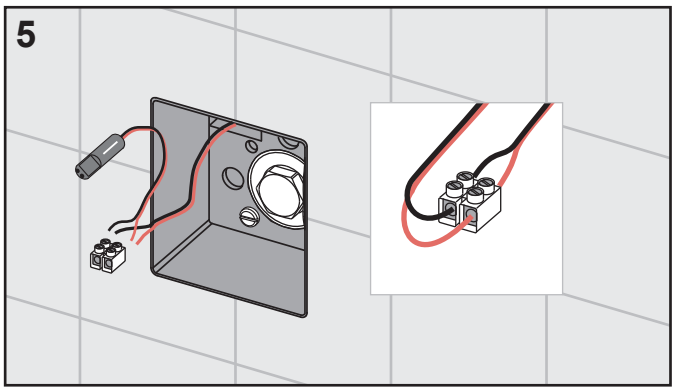
5

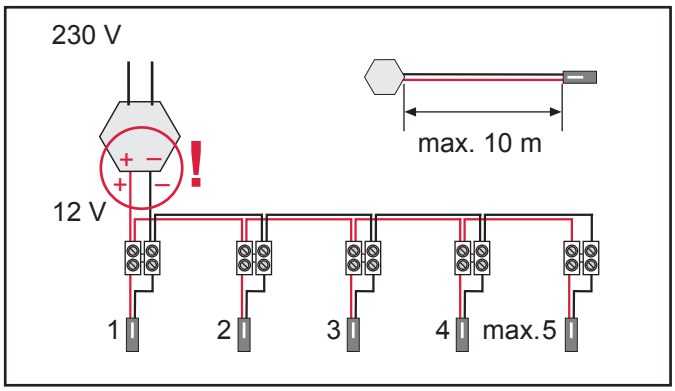
230 V
max. 10 m
12 V
!
1
2
3
4
max.5

TECE

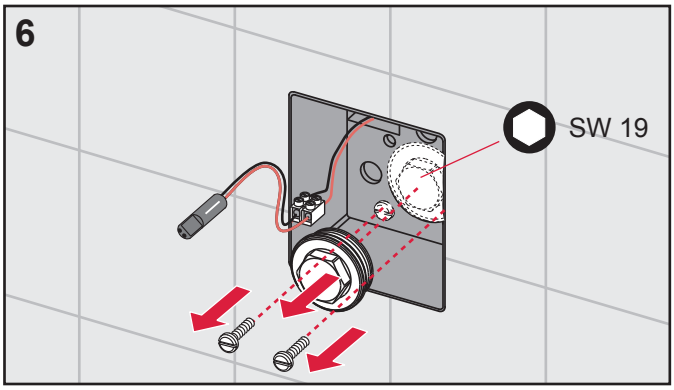

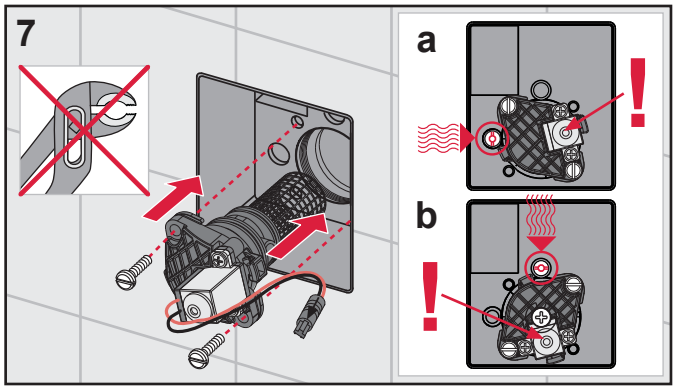

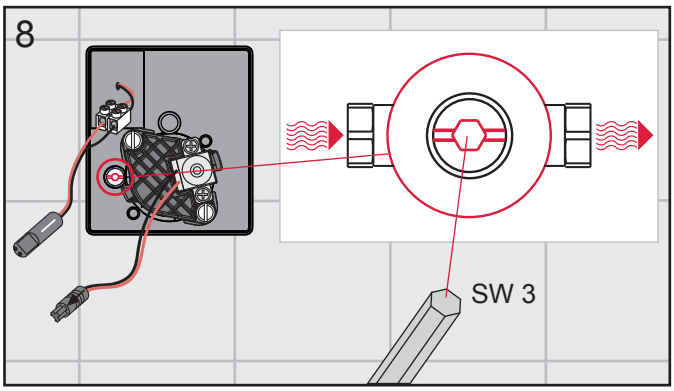

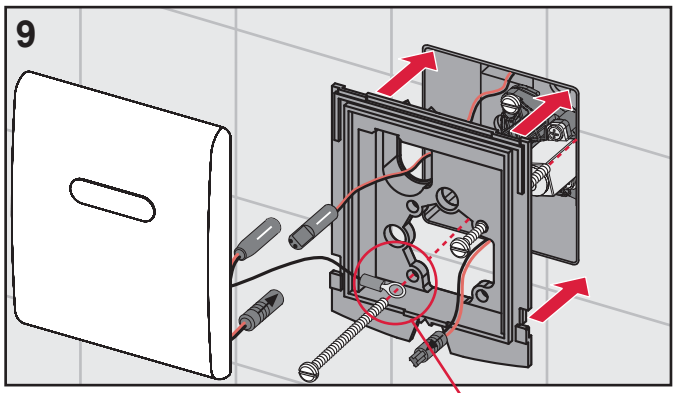

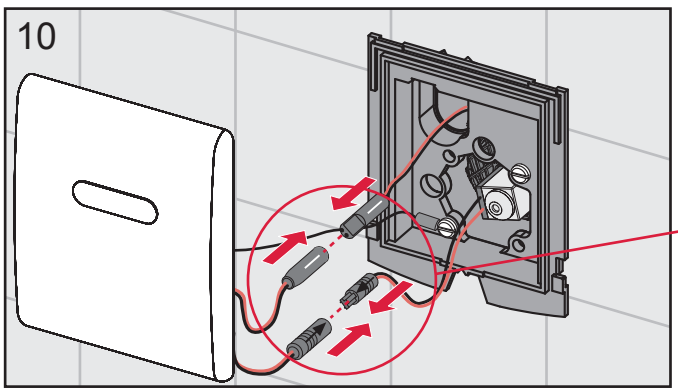

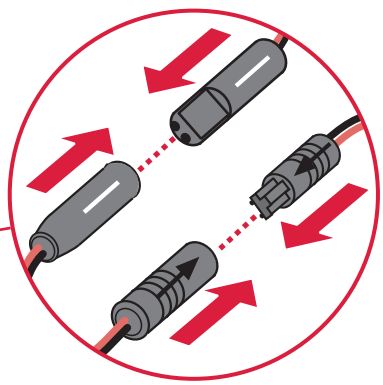

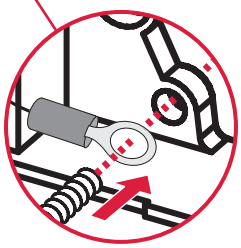

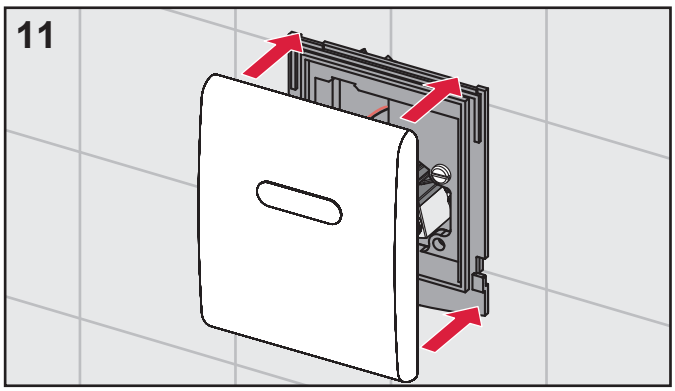

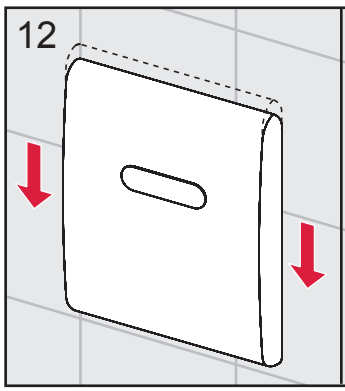

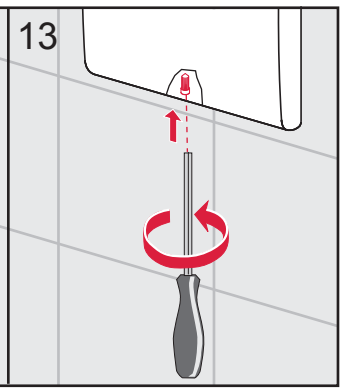

SP430 045 00 a

TECE