TECEsquare 9.240.800 – 9.240.808 + 9.240.647

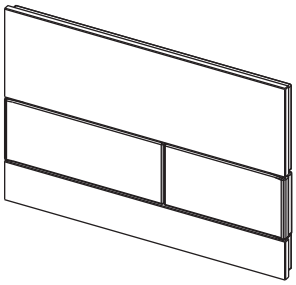

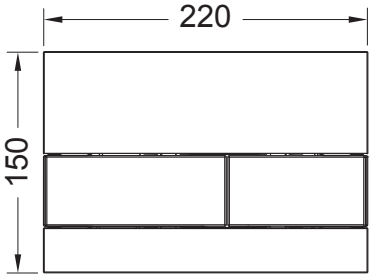

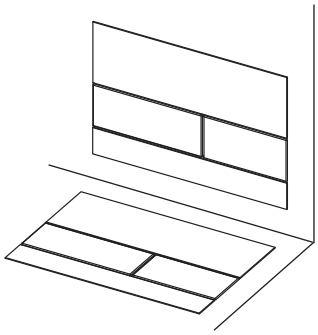

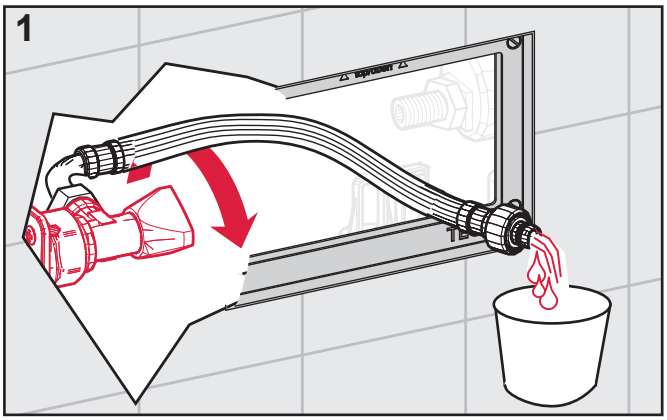

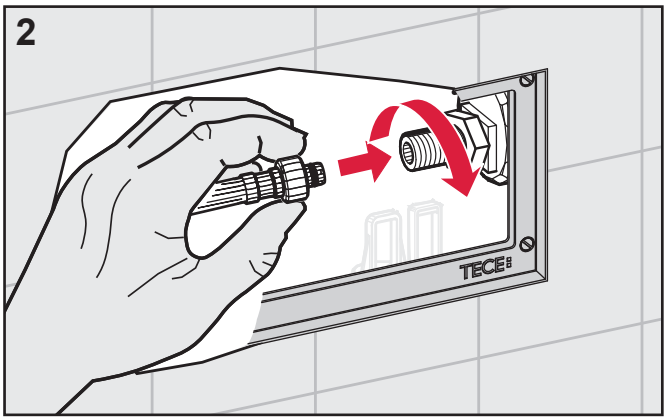

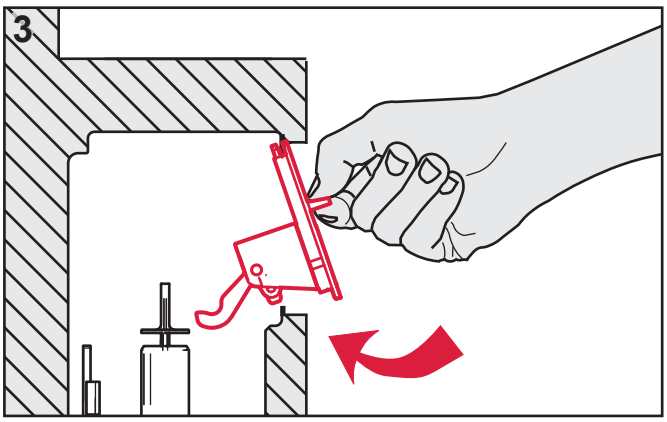

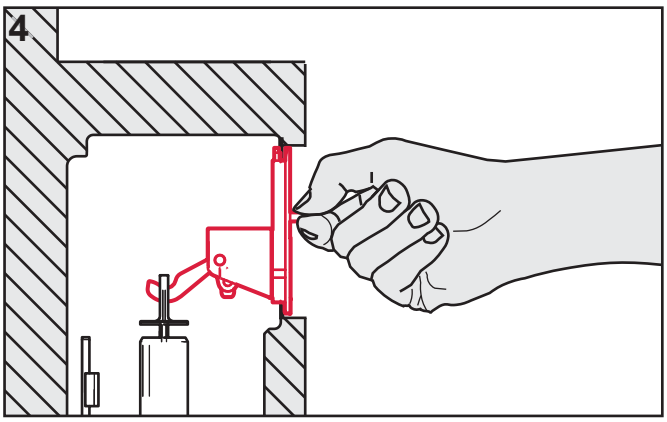

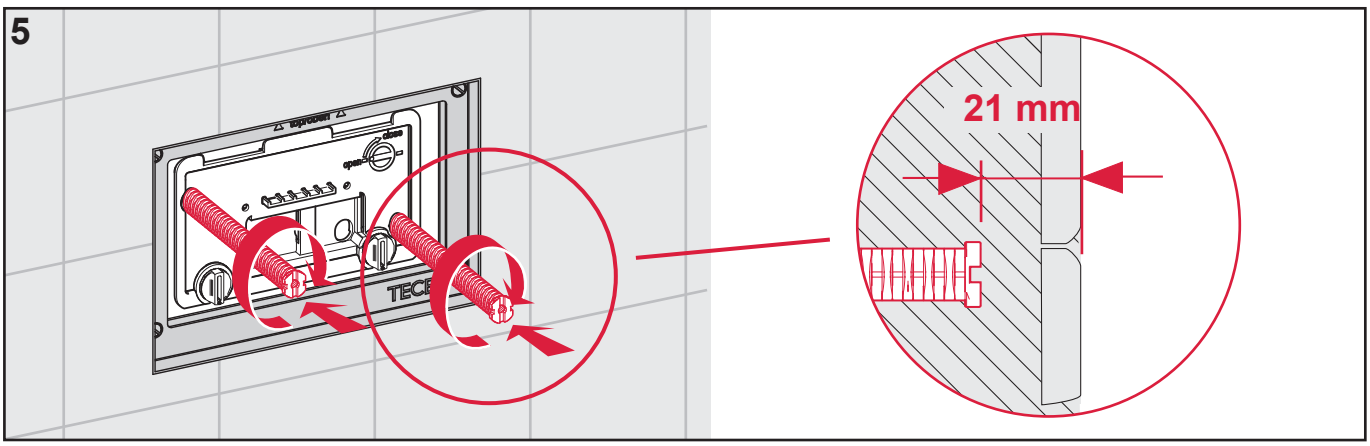

TECE

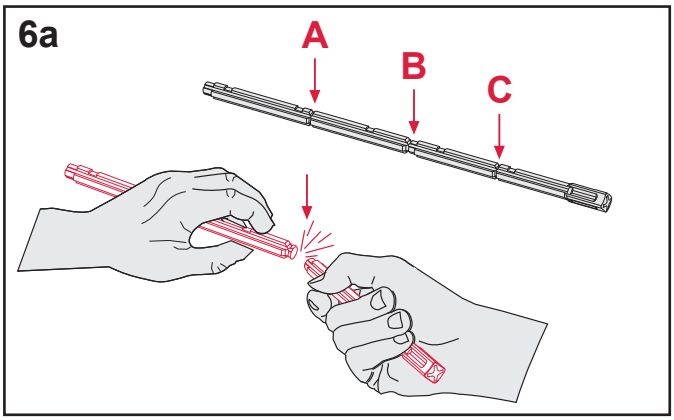

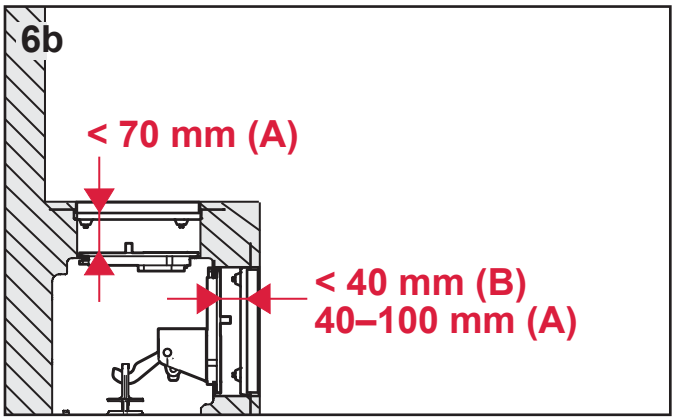

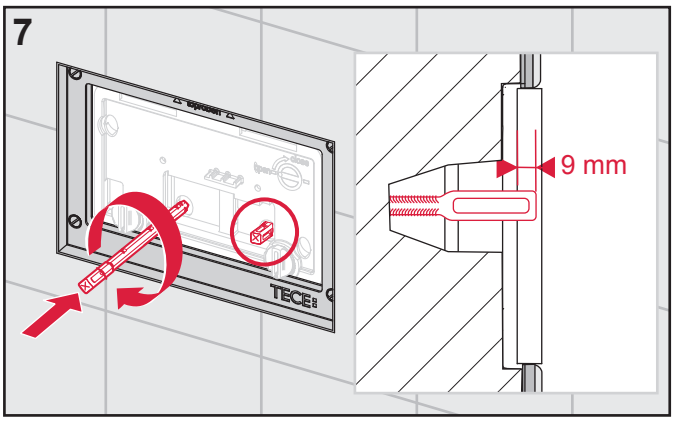

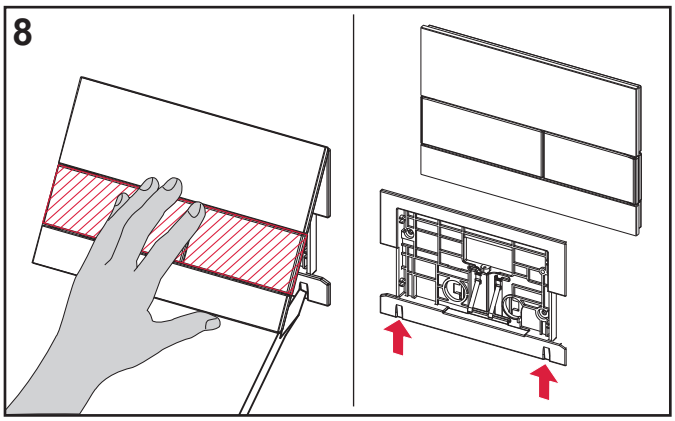

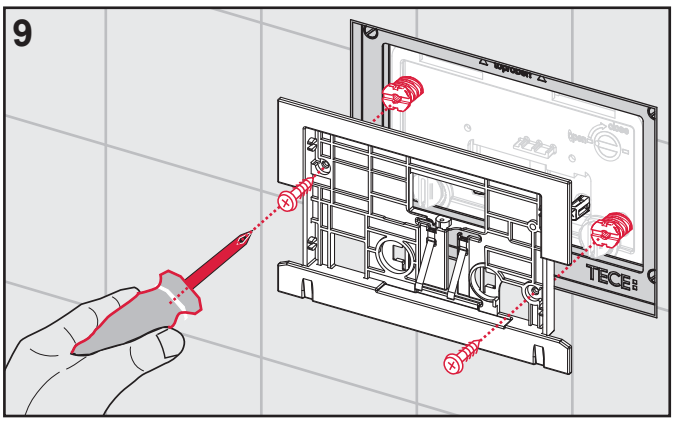

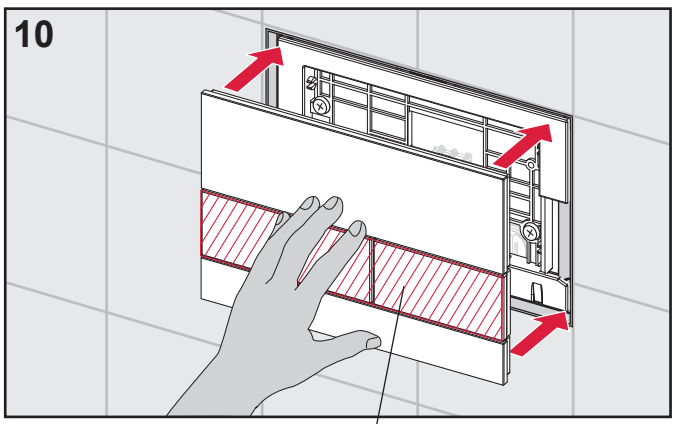

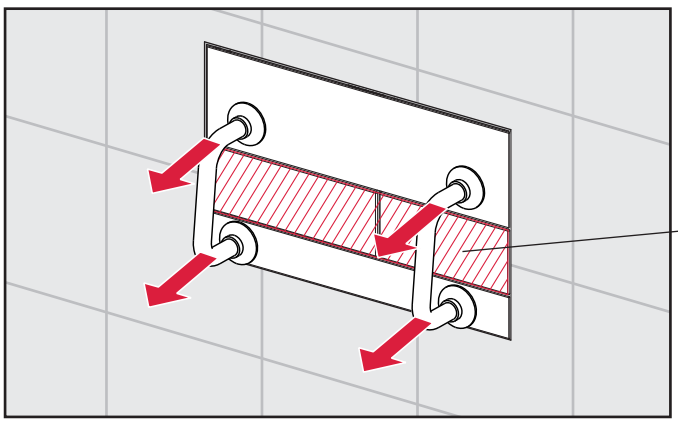

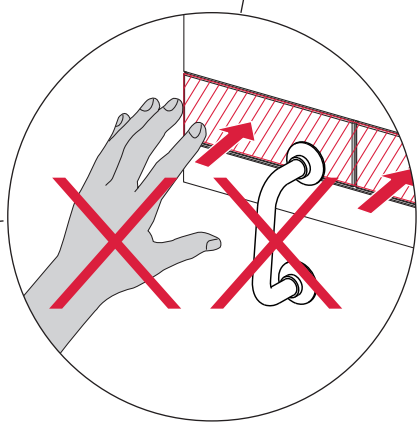

SP430 037 00 b

TECE